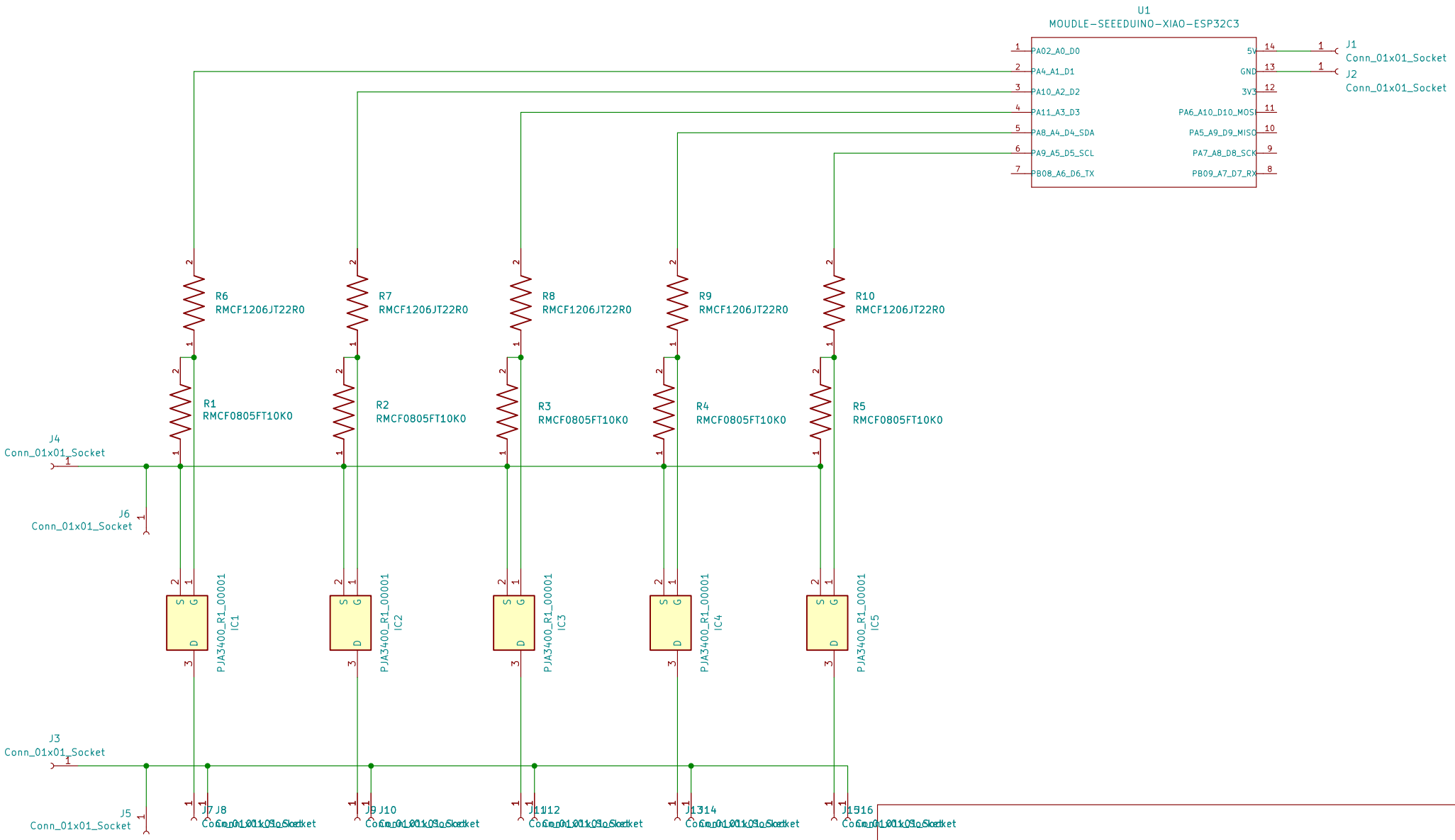

Guildhall School of Music and Drama

Sheet: /

File: Chandeleirs.kicad_sch

Title: Chandeleir PCB – Schematic

Size: A4	Date: 2026-03-15	**Rev: 1**
KiCad E.D.A. 10.0.3		Id: 1/1